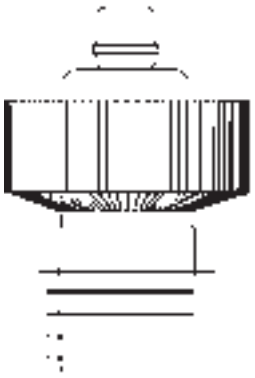

PL5CX1500A

Radial Beam Power Tetrode

The Penta PL5CX1500A is a ceramic / metal power pentode designed for use as a Class AB1 linear amplifier in audio or radio frequency applications. Its characteristic low intermodulation distortion makes it especially suitable for single sideband service. The filament is a rugged mesh type.

The tube is also recommended for use as a Class C rf power amplifier in CW, FM and AM service.

ELECTRICAL

Filament: Thoriated Tungsten		
Voltage	5.0+0.25	V
Current, at 5.0 volts	38.5	A
Transconductance (Average):		
I_b = 1.0 Adc, E_c2 = 500 Vdc	24,000	umhos
Amplification Factor (Average):		
Grid to Screen	5.5	
Direct Interelectrode Capacitance (grounded cathode)		
Input	75	pF
Output	16.5	pF
Feedback	0.20	pF
Frequency of Maximum Rating:		
CW	110	MHz

1. Characteristics and operating values are based upon performance tests. These figures may change without notice as the result of additional data or product refinement. Penta should be consulted before using this information for final equipment design.

2. Capacitance values are for a cold tube as measured in a shielded fixture.

MECHANICAL

Maximum Overall Dimensions:		
Length	5.150 in; 130.81 mm	
Diameter	3.370 in; 85.60	mm
Net Weight	330 oz; 850.5	gm
Operating Position	Axis Vertical, base down or up	
Maximum Operating Temperature:		
Ceramic / Metal Seals		250°C
Anode Core		250°C

(Revised 12/06/94)

P E N T A L A B O R A T O R I E S

21113 SUPERIOR STREET * CHATSWORTH * CALIFORNIA 91311

(800) 421-4219 * (818) 882-3872 * FAX: (818) 882-3968

ELECTRON TUBES FOR INDUSTRY

PL5CX1500A Radial Beam Power Tetrode

Cooling	Forced Air
Base	Special ring and breechblock surfaces

RADIO FREQUENCY LINEAR AMPLIFIER GRID DRIVEN
Class AB1

Absolute Maximum Ratings:

DC Plate Voltage	4000	volts
DC Screen Voltage	750	volts
DC Plate Current	1.0	ampere
Plate Dissspation	1500	watts
Suppresor Dissipation	25	watts
Screen Dissipation	75	watts
Grid Dissipation	25	watts

1. Adjust to specified zero-signal dc plate current.
2. The intermodulation distortion products are referenced against one tone of a two equal tone signal.
3. Approximate values.

Typical Operation (Frequencies to 30 MHz)
Class AB1, Grid Driven

Plate Voltage	2500	3000	4000	Vdc
Suppressor Voltage	0	0	0	Vdc
Screen Voltage	500	500	500	Vdc
Grid Voltage[1]	-87	-89	-90	Vdc
Zero-Signal Plate Current	250	250	250	mAdc
Single-Tone Plate Current	660	690	690	mAdc
Two-Tone Plate Current	470	480	485	mAdc
Single-Tone Screen Current[3]	79	71	59	mAdc
Two-Tone Screen Current[3]	36	32	25	mAdc
Peak rf Grid Voltage[3]	87	89	90	v
Peak Driving Power[3]	0	0	0	w
Single-Tone Useful Output Power	1090	1330	1785	W
Resonant Load Impedance	2340	2680	3500	
Intermodulation Distortion Product[2]				
3rd Order	-38	-36	-33	db
5th Order	-39	-41	-42	db

RADIO FREQUENCY POWER AMPLIFIER OR OSCILLATOR
Class C Telegraphy of FM (Key-Down Conditions)

Absolute Maximum Ratings:

DC PLate Voltage	5000	Volts
DC Screen Voltage	750	Volts
DC Plate Current	1.0	Ampere
Plate Dissipation	1500	Watts
Suppressor Dissipation	25	Watts
Screen Dissipation	75	Watts
Grid Dissipation	25	Watts

Typical Operation (Frequencies to 30 MHz)

Plate Voltage	3000	4000	4500	Vdc
Suppressor Voltage	0	0	0	Vdc
Screen Voltage	500	500	500	Vdc
Grid Voltage	-200	-200	-200	Vdc
Plate Current	900	800	900	mAdc
Screen Current[1]	94	66	88	mAdc
Grid Current1	35	25	34	mAdc
Peak rf Grid Voltage[1]	255	245	255	v
Calculated Driving Power	9.0	6.5	9.5	W
Plate Input Power	2700	3200	4050	W
Plate Dissipation	720	850	870	W
Plate Output Power	1980	2350	3180	W
Resonant Load Impedance	1570	2240	2520	

1. Approximate Value

PLATE MODULATED RADIO FREQUENCY POWER AMPLIFIER-GRID DRIVEN
Class C Telephony (Carrier Conditions)

Absolute Maximum Ratings:

DC Plate Voltage	3500	Volts
DC Screen Voltage	550	Volts
DC Plate Current	0.8	Ampere
Plate Dissipation[1]	1000	Watts
Suppressor Dissipation	25	Watts
Screen Dissipation[2]	75	Watts
Grid Dissipation[2]	25	Watts

1. Corresponds to 1500 watts at 100% sine-wave modulation.
2. Average, with or without modulation.

Typical Operation (Frequencies to 30 MHz)

Plate Voltage	2500	3200	Vdc
Suppressor Voltage	0	0	Vdc
Screen Voltage	500	500	Vdc
Grid Voltage	-260	-260	Vdc
Plate Current	800	800	mAdc
Screen Current[1]	90	86	mAdc
Grid Current[1]	32	32	mAdc
Peak af Screen Voltage[1] (100% Modulation)	500	500	v
Peak rf Grid Voltage[1]	315	315	v
Calculated Driving Power	10	10	W
Plate Input Power	2000	2560	W
Plate Dissipation	530	576	W
Plate Output Power	1470	1958	W
Resonant Load Impedance	1360	1863	

1. Approximate value.

AUDIO FREQUENCY POWER AMPLIFIER OR MODULATOR
Class AB, Grid Driven (Sinusoidal Wave)

Absolute Maximum Ratings (per tube)

DC Plate Voltage	4000	Volts
DC Screen Voltage	750	Volts
DC Plate Voltage	1.0	Ampere
Plate Dissipation	1500	Watts
Suppresor Dissipation	25	Watts
Screen Dissipation	75	Watts
Grid Dissipation	25	Watts

Typical Operation (Two Tubes)

Plate Voltage	2800	3800	Vdc
Suppresor Voltage	0	0	Vdc
Screen Voltage	500	500	Vdc
Grid Voltage	-81	-83	Vdc
Zero-Signal Plate Current	0.50	0.50	Adc
Max. Signal Plate Current	1.30	1.33	Adc
Zero-Signal Screen Current	20	20	mAdc
Max. Signal Screen Current	110	106	mAdc
Peak af Grid Voltage	81	83	v
Peak Driving Power	0	0	w
Max. Signal Plate Dissipation	720	1130	W
Plate Output Power	2200	3220	W
Load Resistance (plate to plate)	4800	6720	

RANGE VALUES FOR EQUIPMENT DESIGN	**MIN.**	**MAX.**	
Filament: Current at 5.0 volts	36.5	40.5	A
Interelctrode Capacitances (grounded cathode connection)			
Input	70	80	pF
Output	14.5	18.5	pF
Feedback	---	0.25	pF
Interelectrode Capacitances (grounded grid connection)			
Input	32	37	pF
Output	14.5	18.5	pF
Feedback	---	0.05	pF

APPLICATION

MECHANICAL

Mounting - The 5CX1500A must be operated with its axis vertical. The base of the tube may be up or down at the convenience of the circuit designer.

Socket - The Penta SK-840 socket and SK-806 chimney have been designed especially for the 5CX1500A. The use of recommended air-flow rates through these sockets provides effective forced-air cooling of the tube. Air forced into the bottom of the socket passes over the tube

terminals through the Air Chimney, and exits through the anode cooling fins.

Cooling - The maximum temperature rating for the anode core of the 5CX1500A is 2500C. Sufficient forced-air circulation must be provided to keep the temperature of the anode at the base of the cooling fins and the temperature of the ceramic / metal seals below 2500C. Air-flow requirements to maintain seal temperature at 2250C in 500C ambient air are tabulated below (for operation below 30 MHz).

	SEA LEVEL		6000 FEET	
PLATE DISSIPATION (WATTS)	AIR FLOW (CFM)	PRESSURE DROP (INCHES OF WATER)	AIR FLOW (CFM)	PRESSURE DROP (INCHES OF WATER)
1000	27	.33	33	.40
1500	47	.76	58	.95

The blower selected in a given application must be capable of supplying the desired air flow ata a back pressure rqual to the pressure drop shown above plus any drop encountered in ducts and filters.

At other altitudes and ambient temperratures the flow rate must be modified to obtain equilvalent cooling. The flow rate and corresponding pressure differential must be determined individually in such cases, esing rated maximum temperatures as the criteria for satisfactory cooling.

ELECTRICAL

Filament Operation - The rated filament voltage for the 5CX1500A is 5.0 volts. Filament voltage, as measured at the socket, should be maintained within +5% of this value or below to obtain maximum tube life.

Grid Operation - The rated dissipation of the grid is 25 watts. This is approximately the product of DC grid current and peak positive grid voltage. Operation at bias and drive levels near those listed will insure safe operation.

Intermodulation Distortion - The Radio Frequency Linear Amplifier operating conditions including distortion data are the results of operation in a neutralized, grid-driven amplifier.

Screen Operation - The power dissipated by the screen of the 5CX1500A must not exceed 75 watts.

Screen dissipation, in cases where there is no ac applied to the screen, is the simple product of the screen voltage and screen current. If the screen voltage is modulated, the screen dissipation will depend upon rms screen current and voltage.

Screen dissipation is likely to rise to excessive values when the plate voltage, bias voltage, or plate load are removed with filament and screen voltages applied. Suitavle protective means must be provided to limit the screen dissipation to 75 watts in the event of ciircuit failure.

Plate Dissipation - The plate dissipation ratings for the 5CX1500A is 1000 watts for Class-C plate-modulated service and 1500 watts for Class-c telegraphy. In Class-AB service the plate dissipation rating is 1500 watts.

Suppressor Operation - The rated dissipation of the suppressor is 25 watts. Suppressor current will be zero or very nearly zero for all typical operating conditions specified. The 5CX1500A has been designed for zero voltage operation of the suppressor grid for most applications.

High Voltage - The 5CX1500A operates at voltages which can be deadly, and the equipment must be designed properly and operating precautions must be followed. Equipment must be designed so that no one can come in contact with high voltages. All equipment must include safety enclosures for high-voltage circuits and terminals, with interlocking switches to open the primary circuits of the power suppliies and to discharge high voltage condensers whenever access doors are opened. Interlock switches must not be bypassed or "cheated" to allow operation with access doors open. Always remember that HIGH VOLTAGE CAN KILL.

PL5CX1500A Radial Beam Power Tetrode

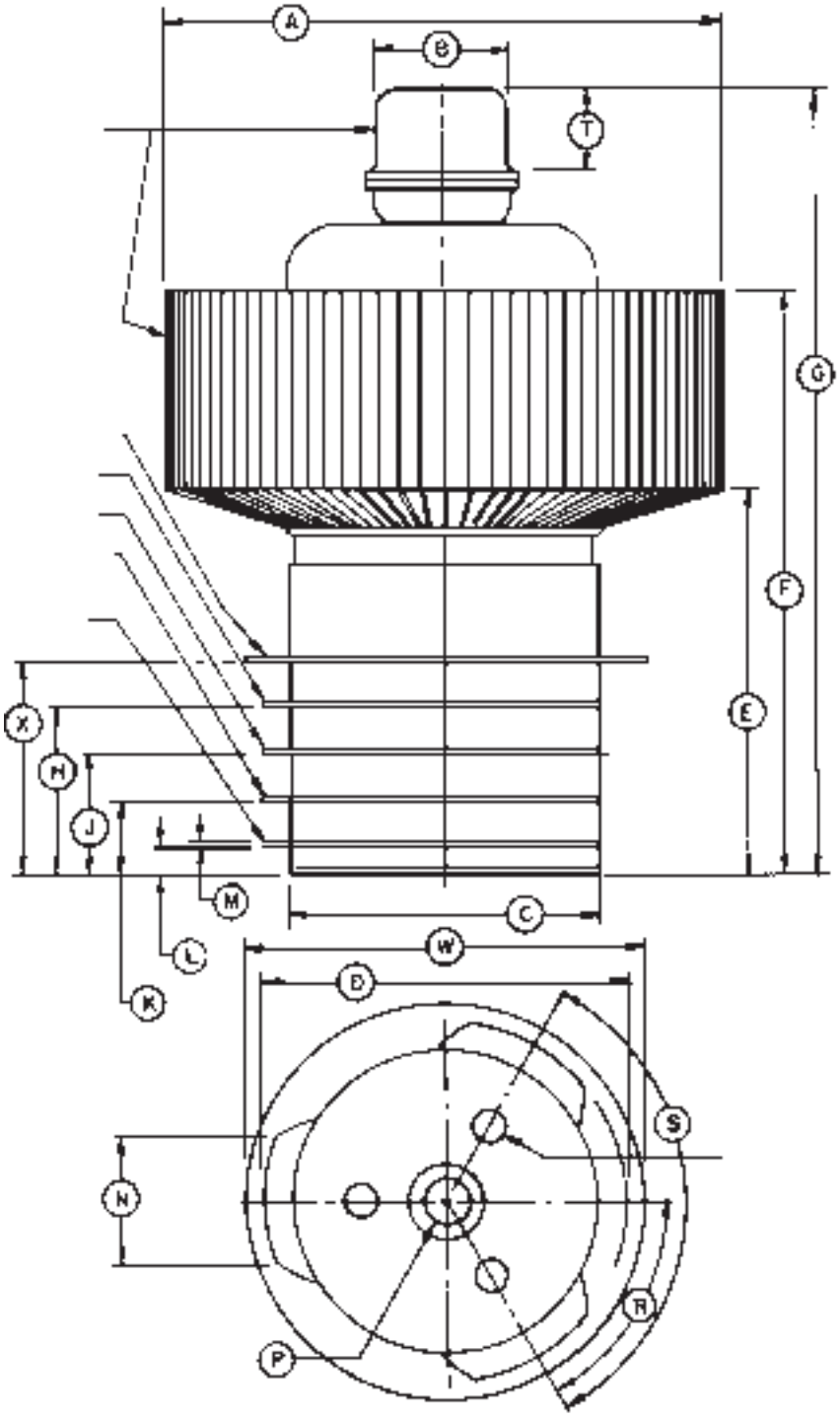

DIM	INCHES			MILLIMETERS		
	MIN	MAX	NOTE	MIN	MAX	NOTE
A	3.555	3.615		90.3	91.80	
B	0.757	0.830		19.22	21.08	
C	REF	REF		REF	REF	
D	.2755DIA	.3000DIA		7.000DIA	7.620DIA	
E	2.875	2.975		73.03	75.57	
F	3.150	3.250		80.01	82.55	
G	1.500	3.150		38.10	80.01	
H	0.965	1.085		24.51	27.56	
J	.0980	.1130		2.489	2.870	
K	0.415	0.485		10.54	12.32	
L	0.490			12.45		
M	.0280	.0370		.711	.940	
N	.0700	.0800		1.778	2.032	
P	.1360 DIA	.1370 DIA		3.454 DIA	3.480 DIA	
R	59°	61°		59°	61°	
S	6°	12°		6°	12°	
T	0.470	0.530		11.94	13.46	
W	2.468	2.532		62.69	64.31	
X	.455	.515		11.56	13.08	

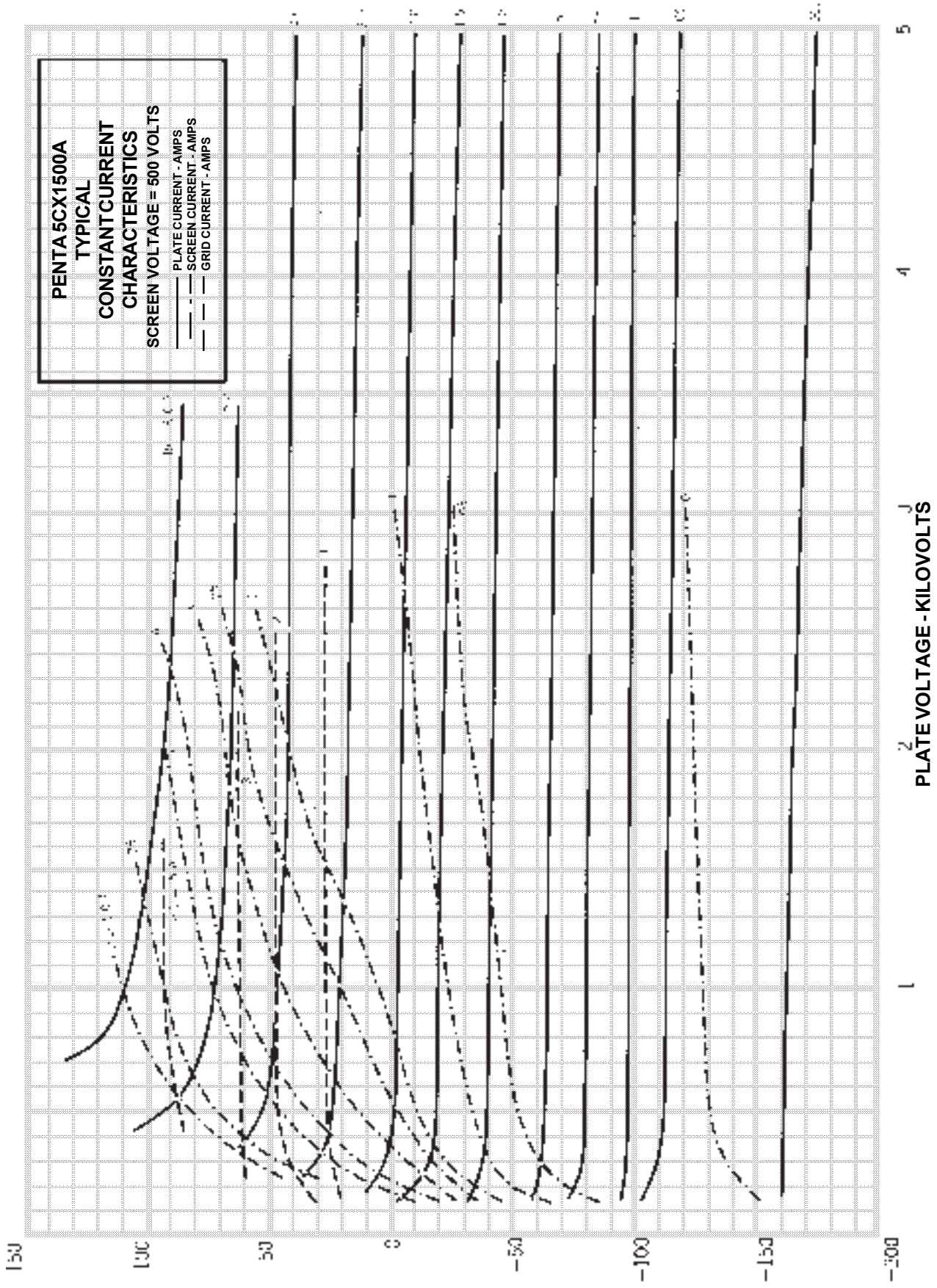
PENTA 5CX1500A
TYPICAL
CONSTANT CURRENT
CHARACTERISTICS
SCREEN VOLTAGE = 500 VOLTS
PLATE CURRENT - AMPS
SCREEN CURRENT - AMPS
GRID CURRENT - AMPS
GRID VOLTAGE - VOLTS
PLATE VOLTAGE - KILOVOLTS

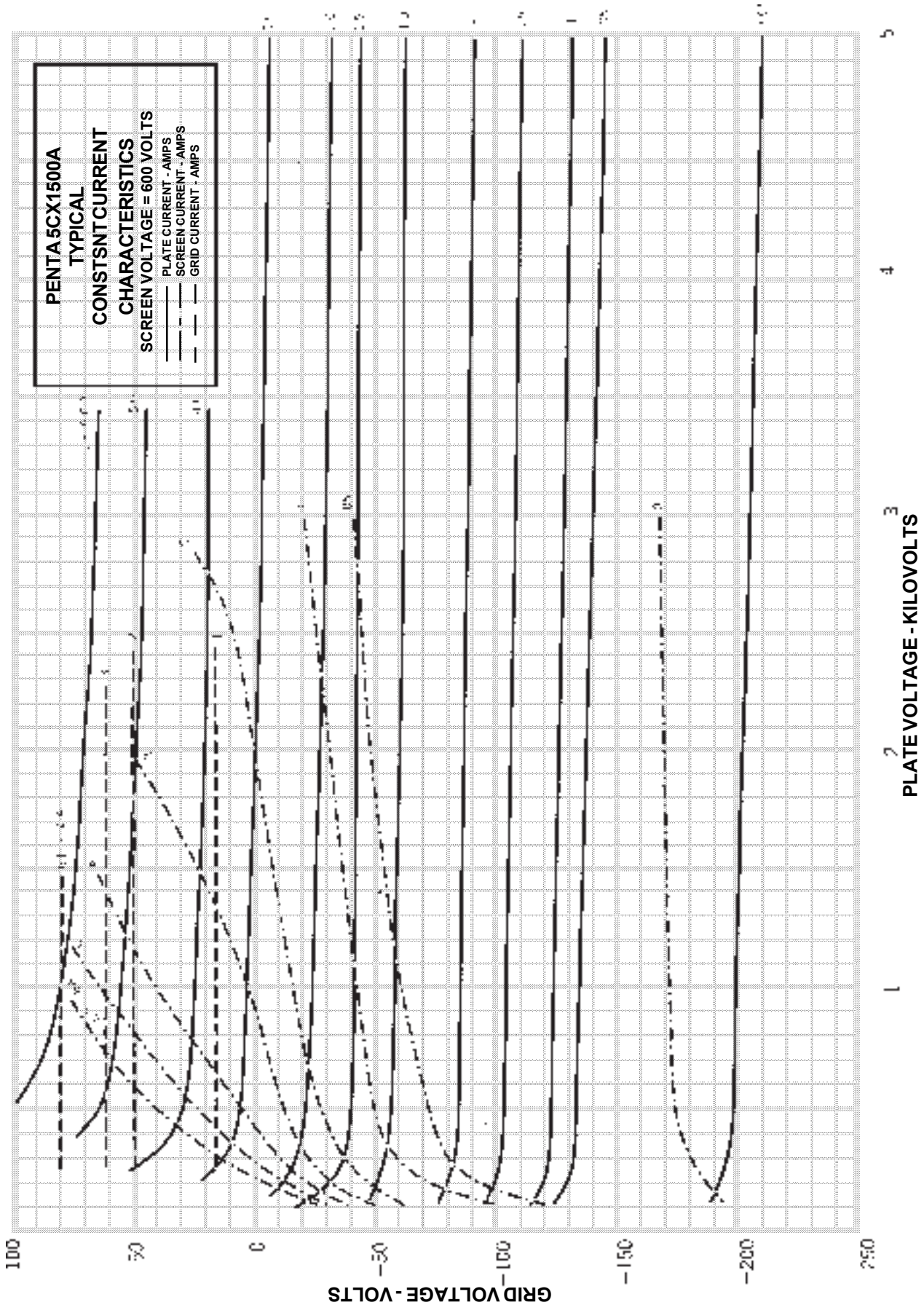
PENTA 5CX1500A
TYPICAL
CONSTSNT CURRENT
CHARACTERISTICS
SCREEN VOLTAGE = 600 VOLTS
PLATE CURRENT - AMPS
SCREEN CURRENT - AMPS
GRID CURRENT - AMPS
100
50
0
-50
-100
-150
-200
250
GRID VOLTAGE - VOLTS
1
2
3
4
5
PLATE VOLTAGE - KILOVOLTS